CATS
CAPITOL AREA TIMEX/SINCLAIR USERS GROUP

NEWSLETTER

$1.00 per copy
Please support your computer
JOIN CATS!

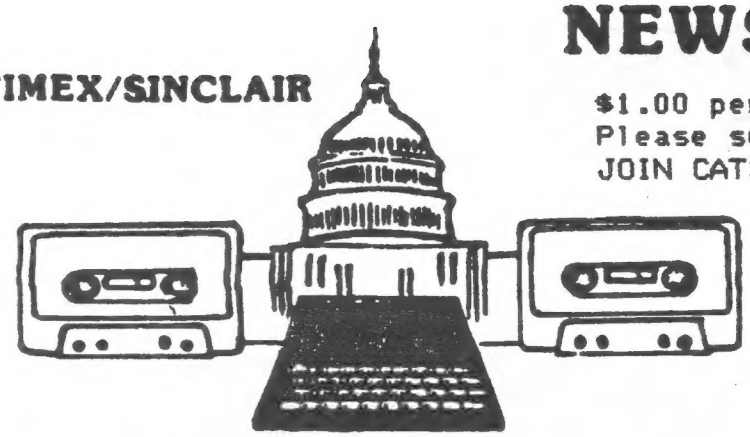

Volume 5, Number 1 April 1987

INSIDE THIS ISSUE

Screen dump for Tandy 105..... p. 3
New 2068 Library software..... p. 4
Digital Imaging hardware proj. p. 6
VuCalc application..... p. 8
Morley on MTOS..... p. 9
Resources for the QL..... p.10

****

CONTRIBUTORS:

Tom Bent	John Riley
Dan Pinko	Eric Michaud
T.G. Morley	Akin Olowofoyeku
N.A. Pashtoon	Roald Schrack

LOOKING TO THE FUTURE

2nd Annual T/S Computerfest
May 2-3
Indianapolis, IN

12th Annual Trenton Computerfest
April 11-12
Trenton State College
Trenton, NJ

PRESIDENTIAL RAMBLINGS

The Indianapolis Computerfest is upon us, as is the Trenton Hamfest. The Trenton fest is the weekend of our April meeting. There will be a Timex Sinclair session on Sunday afternoon.

The Indianapolis meeting is the first weekend in May. There has been some discussion of a car or vanpool to go out there on Friday. It is an all day drive. Speaking from experience, I can say that everyone will have a good time. Why not think about making a weekend of it.

The value of a user group, such as CATS, simply can't be assessed. Even between the last meeting and this one, the group has exercised its muscle and purchased many disk interfaces and 512K ram boards for the recently purchased QL's. The group discount is about 15%. The disk interfaces are $114.95 and ram boards are $133.95. At this writing 9 rams are paid for and 4 disks are paid for. However, there is still time to get in on the action. I have received several calls from out of town to get in on this buy.

Please take advantage of your group. We are here for you (and us). Come on down to the New Carrollton Library and see for yourself!!

This meeting will have a variety of demos as usual. True multitasking can now be done on the QL by using QRAM or Taskmaster. We will demo both.

I have received about 30 QL motherboards, but some of them are missing chips. Those chips that are missing are in transit from England. They will hopefully be here before the meeting. The price of each board really won't be known until they get here, but they should be in the $20 to $35 price range. Hopefully they will be in the lower end. I have also received 15 working microdrives for the QL. They are $25 each and are available if any member blows one.

EDITOR'S CORNER

The first issue of the fifth volume of CATS' newsletter brings some changes! First of all, after four years of hard labor as editors of the newsletter, Mark and Sarah Fisher are taking a well-earned rest and have passed the torch over to me. They have created a tradition of excellence that we can all be proud of, making our monthly publication one of the finest in the U.S. Sinclair community, and I intend to maintain that standard and try to build upon it.

As always, of prime importance is your support, not only through subscribing to the newsletter, but by contributing to it. I am ready to receive your submissions in a number of ways; on QL's Quill (microdrive cartridge or disk), or on the 2068's Mscript or Textwriter 2000 (cassette or Aerco disk), or in "hard copy" form, preferably 35 columns wide. If you see something interesting in a newspaper, magazine, or newsletter that concerns our machines, clip it out and mail it to me. Programs, articles, software and hardware reviews, humor --- I want it all! Don't worry about it if you are afraid that you don't "write well", fixing grammar is what editors are for! Just do your best, and I will polish your prose for you.

Currently I am looking for a person who will do a regular monthly column for each of the Sinclair machines (QL, 2068, & 1000). How about it? Anybody out there interested? Talk to me at (301)674-8560, or write me at 1316 Farrara Dr., Odenton, Maryland 21113.

John Riley

SPECTRUM DISASSEMBLY

```
8B00 00          NOP
8B01 3E1B        LD A,1B
8B03 CDB15B      CALL 5BB1
8B06 3E17        LD A,17
8B08 CDB15B      CALL 5BB1
8B0B 3E1B        LD A,1B
8B0D CDB15B      CALL 5BB1
8B10 3E5B        LD A,5B
8B12 CDB15B      CALL 5BB1
8B15 3E03        LD A,03
8B17 CDB15B      CALL 5BB1
8B1A 3E12        LD A,12
8B1C CDB15B      CALL 5BB1
8B1F 00          NOP
8B20 0E00        LD C,00
8B22 0600        LD B,00
8B24 C5          PUSH BC
8B25 CDBD5B      CALL 5BBD
8B28 47          LD B,A
8B29 04          INC B
8B2A 3E01        LD A,01
8B2C 0F          RRCA
8B2D 10FD        DJNZ,8B2C
8B2F A6          AND (HL)
8B30 08          EX AF,AF'
8B31 7C          LD A,H
8B32 0F          RRCA
8B33 0F          RRCA
8B34 0F          RRCA
8B35 E603        AND 03
8B37 F658        OR 58
8B39 67          LD H,A
8B3A 46          LD B,(HL)
8B3B 08          EX AF,AF'
8B3C 78          LD A,B
8B3D 2003        JR NZ,8B42
8B3F 0F          RRCA
8B40 0F          RRCA
8B41 0F          RRCA
8B42 E607        AND 07
8B44 21905B      LD HL,5B90
8B47 87          ADD A,A
8B48 87          ADD A,A
8B49 5F          LD E,A
8B4A 1600        LD D,00
8B4C 19          ADD HL,DE
8B4D 0603        LD B,03
8B4F 7E          LD A,(HL)
8B50 CDB15B      CALL 5BB1
8B53 23          INC HL
8B54 10F9        DJNZ,8B4F
8B56 C1          POP BC
8B57 04          INC B
8B58 78          LD A,B
8B59 FEC0        CP C0
8B5B 38C7        JR C,8B24
8B5D 00          NOP
8B5E 00          NOP
8B5F 3E1E        LD A,1E
8B61 CDB15B      CALL 5BB1
8B64 3E0D        LD A,0D
8B66 CDB15B      CALL 5BB1
8B69 3E12        LD A,12
8B6B CDB15B      CALL 5BB1
8B6E 0C          INC C
8B6F 20B1        JR NZ,8B22
8B71 3E1E        LD A,1E
8B73 CDB15B      CALL 5BB1
8B76 3E1B        LD A,1B
8B78 CDB15B      CALL 5BB1
8B7B 3E5B        LD A,5B
8B7D CDB15B      CALL 5BB1
8B80 3E0C        LD A,0C
8B82 CDB15B      CALL 5BB1
8B85 3E1B        LD A,1B
8B87 CDB15B      CALL 5BB1
8B8A 3E13        LD A,13
8B8C CDB15B      CALL 5BB1
8B8F C9          RET
8B90 87          ADD A,A
8B91 87          ADD A,A
8B92 87          ADD A,A
8B93 00          NOP
8B94 83          ADD A,E
8B95 86          ADD A,(HL)
8B96 83          ADD A,E
8B97 00          NOP
8B98 85          ADD A,L
8B99 82          ADD A,D
8B9A 85          ADD A,L
8B9B 00          NOP
8B9C 86          ADD A,(HL)
8B9D 80          ADD A,B
8B9E 86          ADD A,(HL)
8B9F 00          NOP
8BA0 84          ADD A,H
8BA1 82          ADD A,D
8BA2 81          ADD A,C
8BA3 00          NOP
8BA4 82          ADD A,D
8BA5 80          ADD A,B
8BA6 82          ADD A,D
8BA7 00          NOP
8BA8 80          ADD A,B
8BA9 82          ADD A,D
8BAA 80          ADD A,B
8BAB 00          NOP
8BAC 80          ADD A,B
8BAD 80          ADD A,B
8BAE 80          ADD A,B
8BAF 00          NOP
8BB0 00          NOP
8BB1 F5          PUSH AF
8BB2 DB7F        IN A,(7F)
8BB4 CB67        BIT 4,A
8BB6 20FA        JR NZ,8BB2
8BB8 F1          POP AF
8BB9 D37F        OUT (7F),A
8BBB C9          RET
8BBC 00          NOP
8BBD 3EBF        LD A,BF
8BBF 90          SUB B
8BC0 DAF924      JP C,24F9
8BC3 CDB022      CALL 22B0
8BC6 C9          RET
8BC7 00          NOP
8BC8 00          NOP
8BC9 00          NOP
```

SCREEN$ DUMP SOFTWARE FOR THE (RADIO SHACK) TANDY 105 PRINTER

For over a year and a half I have been using the TANDY 105 printer for all my personal and business printing duties and have found the unit to be extremly reliable and an excellent value for the thrifty (cheap) TIMEX COMPUTER owner. The printer can be purchased for around $200 (Canadian) on sale and I imagine a lot less in the States. Any RADIO SHACK store carries replacement ribbons and can help if repairs are required. The unit comes with PARALLEL and SERIAL Interfaces (the SERIAL Interface should work directly with the QL and I hope to test this as soon as I build my QL kit) making the printer very flexable.

The only problem I had with the unit is it's strange GRAPHICS MODE. The printer does graphics with only seven of the eight pins and requires the bit pattern to be flipped and have bit 7 set. Because of this strange setup getting SCREEN$ dumps to the printer ment writing my own screen dump program.

The following program is a modified SPECTRUM program originally printed in "YOUR SINCLAIR" magazine. The result is a full 8 1/2" * 11" sideways screen dump that reproduces colors as different shades of gray (see sample print out). The code is 200 bites long and sits in the printer buffer so will not take any RAM used by other programs. I required the program to work in SPECTRUM and 2068 mode so I have enclosed both disassemblies (I use Ray Kingsley's HOT Z-AROS). Please note that the disassemblies are located at 8B00h and not from the printer buffer location 5B00h - trying to print the disassembly from the printer buffer location to the 2040 printer would cause the code to be losted and nothing printed. Load the code using HOT Z or any other assembler into location 5B00h and save to disk or tape. Use a BASIC loader program to load the code into the printer buffer location and when you want to print a screen call it with "RND USR 23296".

I think the TANDY 105 printer is great value for the money and with this utility you can make it even more usefull.

DAN PINHO

2068 DISASSEMBLY

```
8B00 00          NOP
8B01 3E1B        LD A,1B
8B03 CDB15B      CALL 5BB1
8B06 3E17        LD A,17
8B08 CDB15B      CALL 5BB1
8B0B 3E1B        LD A,1B
8B0D CDB15B      CALL 5BB1
8B10 3E5B        LD A,5B
8B12 CDB15B      CALL 5BB1
8B15 3E03        LD A,03
8B17 CDB15B      CALL 5BB1
8B1A 3E12        LD A,12
8B1C CDB15B      CALL 5BB1
8B1F 00          NOP
8B20 0E00        LD C,00
8B22 0600        LD B,00
8B24 C5          PUSH BC
8B25 CDBD5B      CALL 5BBD
8B28 47          LD B,A
8B29 04          INC B
8B2A 3E01        LD A,01
8B2C 0F          RRCA
8B2D 10FD        DJNZ,8B2C
8B2F A6          AND (HL)
8B30 08          EX AF,AF'
8B31 7C          LD A,H
8B32 0F          RRCA
8B33 0F          RRCA
8B34 0F          RRCA
8B35 E603        AND 03
8B37 F658        OR 58
8B39 67          LD H,A
8B3A 46          LD B,(HL)
8B3B 08          EX AF,AF'
8B3C 78          LD A,B
8B3D 2003        JR NZ,8B42
8B3F 0F          RRCA
8B40 0F          RRCA
8B41 0F          RRCA
8B42 E607        AND 07
8B44 21905B      LD HL,5B90
8B47 87          ADD A,A
8B48 87          ADD A,A
8B49 5F          LD E,A
8B4A 1600        LD D,00
8B4C 19          ADD HL,DE
8B4D 0603        LD B,03
8B4F 7E          LD A,(HL)
8B50 CDB15B      CALL 5BB1
8B53 23          INC HL
8B54 10F9        DJNZ,8B4F
8B56 C1          POP BC
8B57 04          INC B
8B58 78          LD A,B
8B59 FEC0        CP C0
8B5B 38C7        JR C,8B24
8B5D 00          NOP
8B5E 00          NOP
8B5F 3E1E        LD A,1E
8B61 CDB15B      CALL 5BB1
8B64 3E0D        LD A,0D
8B66 CDB15B      CALL 5BB1
8B69 3E12        LD A,12
8B6B CDB15B      CALL 5BB1
8B6E 0C          INC C
8B6F 20B1        JR NZ,8B22
8B71 3E1E        LD A,1E
8B73 CDB15B      CALL 5BB1
8B76 3E1B        LD A,1B
8B78 CDB15B      CALL 5BB1
8B7B 3E5B        LD A,5B
8B7D CDB15B      CALL 5BB1
8B80 3E0C        LD A,0C
8B82 CDB15B      CALL 5BB1
8B85 3E1B        LD A,1B
8B87 CDB15B      CALL 5BB1
8B8A 3E13        LD A,13
8B8C CDB15B      CALL 5BB1
8B8F C9          RET
8B90 87          ADD A,A
8B91 87          ADD A,A
8B92 87          ADD A,A
8B93 00          NOP
8B94 83          ADD A,E
8B95 86          ADD A,(HL)
8B96 83          ADD A,E
8B97 00          NOP
8B98 85          ADD A,L
8B99 82          ADD A,D
8B9A 85          ADD A,L
8B9B 00          NOP
8B9C 86          ADD A,(HL)
8B9D 80          ADD A,B
8B9E 86          ADD A,(HL)
8B9F 00          NOP
8BA0 84          ADD A,H
8BA1 82          ADD A,D
8BA2 81          ADD A,C
8BA3 00          NOP
8BA4 82          ADD A,D
8BA5 80          ADD A,B
8BA6 82          ADD A,D
8BA7 00          NOP
8BA8 80          ADD A,B
8BA9 82          ADD A,D
8BAA 80          ADD A,B
8BAB 00          NOP
8BAC 80          ADD A,B
8BAD 80          ADD A,B
8BAE 80          ADD A,B
8BAF 00          NOP
8BB0 00          NOP
8BB1 F5          PUSH AF
8BB2 DB7F        IN A,(7F)
8BB4 CB67        BIT 4,A
8BB6 20FA        JR NZ,8BB2
8BB8 F1          POP AF
8BB9 D37F        OUT (7F),A
8BBB C9          RET
8BBC 00          NOP
8BBD 3EBF        LD A,BF
8BBF 90          SUB B
8BC0 DA5228      JP C,2852
8BC3 CD0926      CALL 2609
8BC6 C9          RET
8BC7 00          NOP
8BC8 00          NOP
8BC9 00          NOP
```

INTRODUCING VOLUMES SIX AND SEVEN IN THE 2068 SOFTWARE LIBRARY

After several months of collecting new software from contributors across the country, here are the latest additions to the 2068 library! The sixth volume is a "mixed bag" for the 2068, containing something for everyone. The seventh volume is a Spectrum-only collection, requiring as Romswitch or other Spectrum emulation to work. But enough of this preamble, let's get on to the program descriptions.....

Volume Six --- Mixed Bag

MTOS (utility) - This is a program development tool that can come in handy for anyone who is creating a new program or modifying an old one. For a fuller description see the letter later in this newsletter by its author, CATS member T.G. Morley. It is available to CATS members only by special arrangement with Mr. Morley, but non-members can purchase through Sharp's of VA.

TEXTYPE (word processor) - A nice little program that lets you print out your hardcopy in any of four different typestyles (regular, bold, modern, or italic) if you use a 2040 printer. With a little creative wangling it can be adapted to print out to an 80-column printer, too.

3D WORD (graphics) - Creates 3d words out of little box-girder-like udgs for use in article titles, etc. Look for an example in one of the headlines in this issue.

3D DRAW (graphics) - a program which will, if you learn its quirks, draw for you a wide variety of 3d objects on an x-y grid. Its fun to watch.

CURSOR (demo) - Will teach you how to put other symbols inside the 2068 flashing cursor.

DUB (utility) - IF you have a good pair of tape recorders and IF you get the volumes adjusted right, this program will PERFECTLY COPY most any program by reading the signal coming into the EAR port, cleaning it up, and feeding it directly out through the MIC port. This could be the answer to the prayers of those of you having trouble making archival copies of your programs!

ANIMATE (demo) - Shows how you can use BASIC to give life to a spritely (pun!) little marching man.

FILL (demo) - Fills cursor-selected spaces with color, pixel by pixel. Rather slow, but there is a lot to learn from examining the listing.

BLOKMAN (game) - a slightly watered down version of the Spectrum game that was included in Volume 4, this time for the 2068. Joystick in left port.

PACMAN (game) - It had to happen sooner or later! This version would be exciting to persons 6 years and younger. Use arrow keys.

BELLTOWER (game) - Now this one is pretty tough! A variation on the platforms and ladders type of game. It contains a very nice user-programmable keys function which could come in handy in your own programs.

GHOTI (game) - You are a fish, eating bubbles and avoiding hungry turtles to survive. Use arrow keys.

ARTIC EXPLORER (game) - Avoid the pitfalls and win through to the North Pole. Controls: O=Left, P=Right, O+CS (capshift)=Jump Left, P+CS=Jump Right.

PAWS (game) - You are a cat. Eat the mice but avoid the rats. Use RIGHT joystick port.

WAGONERS (game) - A faster-than-the-speed-of-snails race between three wagons. You bet on the outcome.

CURSOR ADVENTURE (text adventure) - Hey! Our first text adventure!

WORDSQUARE (game) - a hidden-word puzzle generator, with less capacity than the one found in Volume One, but faster in producing the result.

ADVERTISING DISPLAY (utility) - Large letters flow from right to left across the screen in an unending loop. You can input the message that the letters spell out. A Spectrum version is in Volume Seven.

SPANISH TUTOR (educational) - A "99% complete" version of the program that was included in Volume 2.

SPANISH BUILDER I (educational) - Vocabulary practice for what you learned from SPANISH TUTOR.

SPANISH BUILDER II (educational) - More vocabulary practice!

VOLUME SEVEN - MORE SPECTRUM SOFTWARE

WAR OF THE SHIRES (adventure game) - This text-and-graphics adventure is a sort of poor man's War in the East. You can manipulate several charcters and their armies to try and defeat the enemy. Well done and a challenge to play.

KRAKATOA 2012 (game) - The Krakatoa volcano is about to blow up again, because some nasty aliens have been fooling with it. Your mission - rescue the islanders and destroy the aliens. Use arrow keys.

RIFLE RANGE (game) - A shooting gallery game. This one is popular with children. Use any key to fire the rifle.

SCROLLS (utility) - Does a very fast vertical scroll within a defined window on the screen.

SCROLL (utility) - Another type of scroll that "creeps" a block of text cross the screen.

CAPMAN (game) - The Spectrum version of Pacman. Written in machine code, it is much faster than the 2068 version.

ADVERTISING DISPLAY (utility) - Same as the program of the same name described in Volume Six.

CLONE (utility) - This is a GREAT UTILITY!! It is similar to the clone utilities on the QL, in that it loads in the program to be cloned a section at a time, then prompts you to put in a fresh tape and save that section. The only programs that balk it are the ones that I can't crack either.

SPECTRAMONITOR (utility) - a nicely done disassembler with mnemonics for the Spectrum.

FORTH (language) - An implementation of forth, for those interested in learning it. The command "DLIST" will list the dictionary that you have to work with.

Members of CATS can get a copy of the new software by sending $2.00 to John Riley, 1316 Farrara Dr., Odenton, Maryland 21113. The money covers the cost of the tape and mailing. Non-members can receive CATS software via swapping other public domain programs that we do not yet have. For details and a full listing of the 2068 library send a large SASE to the above address.

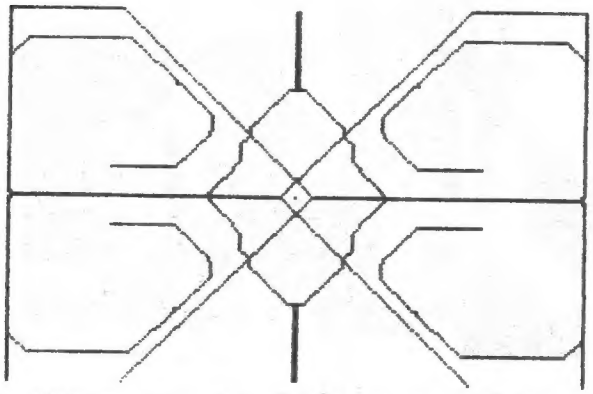

A=ARC F=FRAME C=CPY S=SUPERFILE
M=MAGNIFY P=PAPER I=INK 1&2=MENU

Drawn using "Grafixx" from the CATS 2068 software library. Artwork by Abe Riley, age 6.

Q (L) TIPS

Are you getting flooded out by those fiddly little microdrive cartridges that don't seem to fit in anything nicely? Do you dislike the "wallets"? Well, here are a couple of alternatives for you. #1- break out the sprocket tabs from a plastic cassette case, and you will have a transparent carrying case for 3 cartridges. Note: sometimes you have to put a rubber band around the case to keep it closed. #2- Paul Bingham recently suggested in Quantum Levels that you could take several cassette cases apart, glue the transparent sections together in stairstep fashion, and create a storage rack that would hold 3 cartridges on each level. #3- Go to an office supply store and buy a business card box for about $4. This box will hold 30 cartridges standing on end, and has a see-through top so that you can read the contents at a glance.

"But", you say, "I'm going **crazy** cutting little fiddly pieces of tape to label the ends of my little fiddly cartridges!" No problem. While you are at the office supply store buying your business card box, hop over to the typewriter supplies and buy some 1/6" cover-up strips, made by Avery and supplied in sheets or rolls. They just happen to exactly fit the indentation at the end of the cartridge.

A NOVELTY
TS 2068

An interesting and rather "pretty" bug exists in the way the DRAW command executes its arc-making facility. Try this short routine:

```
10 INPUT "Any odd number";n
15 CLS
20 PLOT 75,50:DRAW 100,100,PI *n
30 GOTO 10
```

Having RUN this program, try adding the following line. 5 OVER 1

Try inputting these numbers: 253, 237, 375, 287, 157, and EXPERIMENT!!

From the L.I.S.T. newsletter

Digital Imagizing - Part I

By Eric Michaud

Have you ever wanted to have some REAL pictures for your 2068? I don't mean your usual pictures from your typical drawing programs but real pictures, such as your face, for example. This tutorial will show you how to hook up a video camera to your 2068 with a fairly simple hardware attachment.

I chose to wire-wrap my prototype and it worked fine but be sure to keep wires as short as possible in the op-amp section of the circuit. My version lies in the cartridge port but it would be easy enough to transfer to the rear connector if desired. Other than that I will leave the actual construction up to you.

The circuit can be divided into two parts. The interface and the digitizing circuitry. The interface section simply provides 8 inputs and 8 outputs. Only 4 outputs are actually used along with 2 inputs. The extra lines could be used for your own projects. I chose to map the interface to IO port 00 but this could easily be changed to another port if it interferes with another piece of hardware. Small software changes would have to be made to accomodate for this change. The digitizing section of the circuit essentially separates the video sync signal and the actual picture data from your video source and by use of the LM311's, the picture is converted to a digital format. Then through timing accomplished by the 74LS74N and the LM556, the picture is sampled at appropriate times to collect the image.

It is important to note that you must have a still video source as it takes 5 seconds to collect one image. Also, your video source must be capable of driving a monitor. RF video such as from a ZX81 will NOT work. A VCR or video camera with a MONITOR OUT jack will work. For testing purposes, I recommend another computer with a monitor output plug or a VCR with shake-free freeze frame. There are three controls on the digitizer. The BRIGHTNESS knob sets the brightness of the image. The STRETCH knob allows you to horizontally expand or compress the image. Finally the SYNC knob is used to place yourself 'in sync' with the incoming video source.

I will leave you with the schematic for now and in the next article, setup, theory and use will be discussed. In the meantime, I suggest that you obtain the driver software from the club library. The program is called EyByNi.81.

DIGITIZED PICTURES BY DAN PINHO

This article from Sinc-Link, the newsletter of the Toronto T/S User's Club.

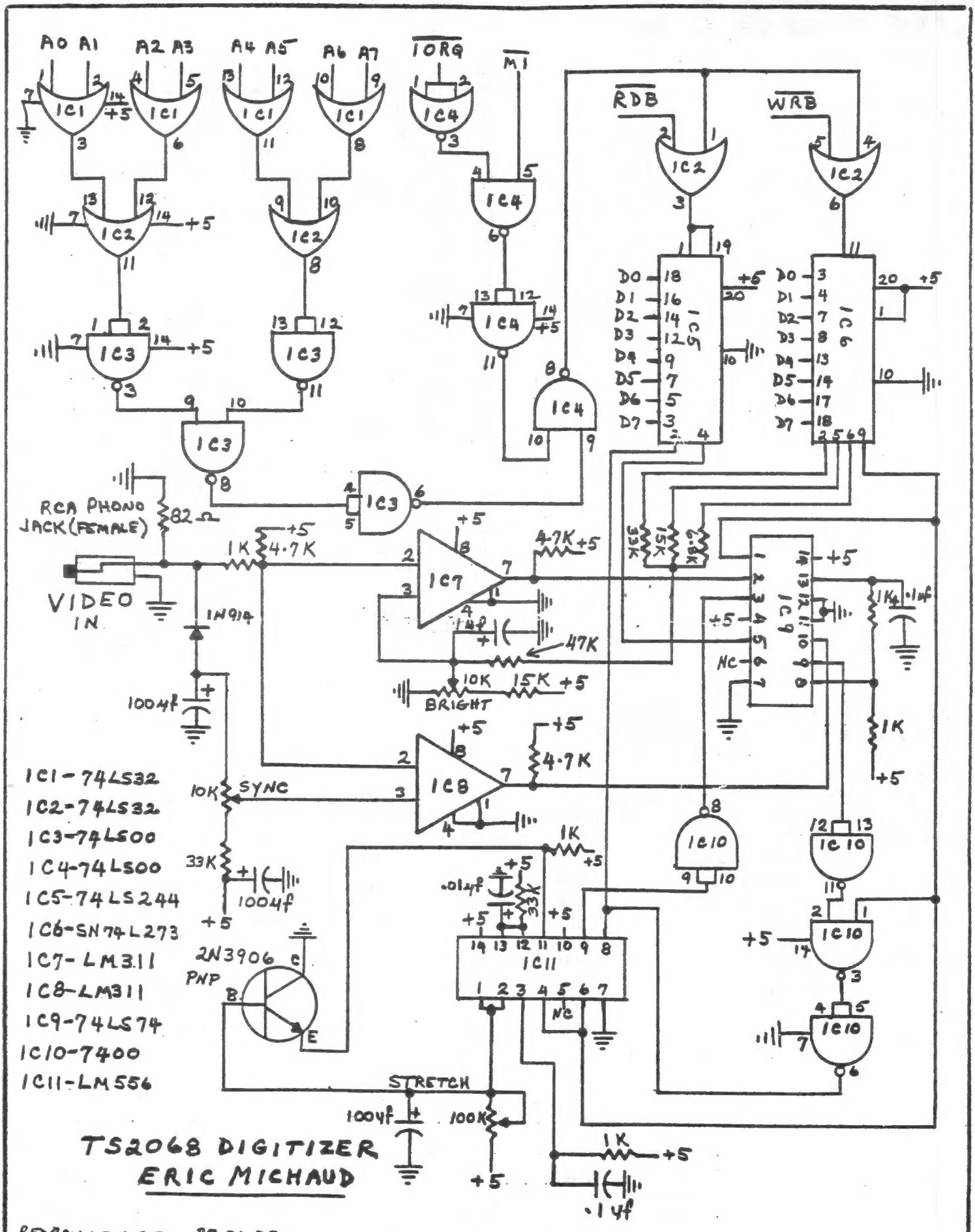
A0 A1
A2 A3
A4 A5
A6 A7
IORQ
M1
RDB
WRB
IC1
IC2
IC3
IC4
IC5
IC6
IC7
IC8
IC9
IC10
IC11
D0
D1
D2
D3
D4
D5
D6
D7
RCA PHONO JACK (FEMALE)
82 Ω
VIDEO IN
1N914
100µf
1K
4.7K
47K
10K
15K
BRIGHT
33K
6.8K
SYNC
.01µf
2N3906 PNP
STRETCH
100K
.1µf
NC
IC1-74LS32
IC2-74LS32
IC3-74LS00
IC4-74LS00
IC5-74LS244
IC6-SN74L273
IC7-LM311
IC8-LM311
IC9-74LS74
IC10-7400
IC11-LM556
TS2068 DIGITIZER
ERIC MICHAUD
REDRAWN BY GFC 87 01 03

Vu-Calc

AS PETTY CASH

Our own Akin Olowofoyeku has been working on a number of interesting applications for the 2068's VuCalc. If you like this one, be happy! There are several more yet to come. How about the rest of you? Do you have some unique uses for VuCalc that you can share? Or how about some Archive applications from you QL users? Send them in, the editor is hungry for material!

Anyway, here is Akin's use of VuCalc as a petty cash register.

```
Location: Instruction
a1: #f,a,1
f1: "=======
f2: #r,f1,f2:f12
f14: #r,f1,f14:f18
e5: "PETTY  CASH
e7: "REGISTER
e12: #f,12,r
e12: "1986 (or current year)
e15: "EXPENSE  REGISTER
g1: "VOUCH#
g2: "DATE
g3: "CODE
g4: "DESCRIPTION
g8: "PAYMENT
g10: "RECEIPT
g12: "BALANCE
g14: "POSTAGE
g16: "DELIVERY
g18: "MISC.
h4: "BALANCE FORWARD
i3: #f,3,i,1
i3: 0
j3: #r,i3,j3:av3
i8: #f,8,$,r
i8: 0
j8: #r,i8,j8:av8
i10: #f,10,$,r
i10: 0
j10: #r,i10,j10:av10
h12: #f,12,$,r
h12: 0
```

```
Location: Instruction
i12: h12+i10-i8
j12: #r,i12,j12:av12
aw1: "--------
aw2: #r,aw1,aw2:aw12
aw14: #r,aw1,aw14:aw18
ax6: "TOTALS
ax8: &i8:av8
ax10: &i10:av10
ax12: av12
i14: #f,14,$,r
i14: (i3=1)*i8
j14: #r,i14,j14:av14
f14: "1
i16: #f,16,$,r
i16: (i3=2)*i8
j16: #r,i16,j16:av16
f16: "2
i18: #f,18,$,r
i18: (i3=3)*i8
j18: #r,i18,j18:av18
f18: "3
ax14: &i14:av14
ax16: &i16:av16
ax18: &i18:av18
a1: "Petty Cash Journal >#g,g1
b1: "Expense Record >#g,e14
d1: "Save,#s :Load,#1 :Print,#q
e1: "Petty Cash Check Code=0
a6: "AKO ENTERPRISES
b6: "1613 DAYTON ROAD
c6: "ADELPHI, MD 20783
```

```
Petty Cash Journal >#g,g1          AKO ENTERPRISES
Expense Record >#g,e14             1613 DAYTON ROAD
                                   ADELPHI, MD 20783

Save,#s :Load,#1 :Print,#q
Petty Cash Check Code=0     PETTY CASH    REGISTER                    1986          EXPENSE   REGISTER
=============================================================================      ==================================
VOUCH# DATE   CODE  DESCRIPTION                PAYMENT     RECEIPT     BALANCE    POSTAGE     DELIVERY     MISC.
                    BALANCE FORWARD                                       0.00          1            2          3
500    1:1    0     Established Fund             0.00      100.00      100.00       0.00         0.00       0.00
100    1:2    1     Postage for sales            8.00        0.00       92.00       8.00         0.00       0.00
101    1:4    1     Telegraph                    8.00        0.00       84.00       8.00         0.00       0.00
102    1:8    2     Taxi fare                   10.00        0.00       74.00       0.00        10.00       0.00
103    1:10   3     Coffee for O/T               4.00        0.00       70.00       0.00         0.00       4.00
104    1:15   1     Stamps                      18.00        0.00       52.00      18.00         0.00       0.00
105    1:25   3     Window cleaning             12.00        0.00       40.00       0.00         0.00      12.00
               0                                 0.00        0.00       40.00       0.00         0.00       0.00
501    2:1    0     Replenished Fund             0.00       60.00      100.00       0.00         0.00       0.00
               0                                 0.00        0.00      100.00       0.00         0.00       0.00
.....

               0                                 0.00        0.00      100.00       0.00         0.00       0.00
-----------------------------------------------------------------------------      ----------------------------------
                                  TOTALS        60.00      160.00                   34.00        10.00      16.00
```

MTOS, A 2068 UTILITY

Dear Mr. Riley:

...Here is a short writeup of MTOS and it's use. The program is generally self-explanatory and really has only one use.

The programs that were on the menu in MTOS were included simply to show it's use; however, I believe all of them are self-explanatory or are user-friendly. If you'd like to include my name and address feel free to do so (2217 E. Riverside Dr., Truth or Conse- quences, NM 87901). I will be happy to help anyone who writes.

Sincerely,
T.G. Morley

****

MTOS is a self-modifying program that will add a newly entered or loaded program to its menu, without worrying about changing line numbers.

In the beginning I needed several programs to help in constructing a Basic program. I got tired of loading a tape every time I needed help and MTOS is the result.

The working program is line #1 thru 216 and 9997 thru 9999. Any alteration of these lines will destroy the program. With your imagination though I'm sure that you can improve upon it.

MTOS can also be used as a "library shelf" to hold several games or perhaps a disassembler and a monitor and assembler.

This sounds like a winner; how about a program in which it is necessary to consult pages of data or graphs in any order at any time? Punch up the menu, call the correct data or graph, and go back to the original program with the information that you need.

The instructions are simple:

1..to load or enter code select "merge" on the menu. Most of your work is done from "merge".
2..while you are in "merge" you may work on the program as if it were the only one in the machine.
3..after the merge is completed you can call up other utilities and still bring up the last program on the meny to work on.
4..to delete a program or group of programs call up the lowest, then (DELETE, 9996 ENTER) and (GOTO 9998 ENTER).
5..to change the last meny entry (GOTO 9998 ENTER) and enter a name as long or longer.
6..(SHIFT BREAK) will goto menu, holding (SHIFT BREAK) will break to Basic.
7..the rest is up to your imagination -- enjoy!
8..CATS members only may use this copy of MTOS without copyright infringement.

THE NEW YORK TIMES,

WEDNESDAY, FEBRUARY 18, 1987

New Sinclair Computer Set

LONDON, Feb. 17 (Reuters) — Sir Clive Sinclair, the British inventor who was forced to sell his computer empire after it fell on hard times last year, today introduced what he said was the world's smallest and most portable personal computer.

Described as the "first portable with full personal computer facilities," Sir Clive's new Z88 weighs less than 2 pounds, measures 11½ by 8¼ inches and has a memory capable of storing the entire works of Shakespeare.

Introduced at a computer exhibition in Birmingham, England, the I.B.M.-compatible machine sells for $350 — at least two-thirds cheaper than many of its competitors. Sir Clive, whose disastrous venture into electric cars with his miniature C5 tricycle failed to catch the public's imagination, sold his previous computer company and even the Sinclair name to a rival computer maker, Amstrad, last year for $7.7 million.

Resources and Products for the QL

By: N.A. Pashtoon

The last two months I called up various vendors and asked for their catalogs of QL products. The information supplied by these vendors is tabulated and cateogorized in the tables presented below. The information from two vendors is missing from these tables. The vendors are Brice Road Pharmacy , and Curry Computer. Brice Road Pharmacy came to my attention too late and I did not ask for their product catalog. Curry Computer, even though I asked for their catalog, I have not the information yet. I think they mailed the info. to my previous address. I talked with SUNSET Electronics. John Woburn told me that yes he had QL products, but that he was getting out, and no he is not selling his existing stock at "fire-sale" prices. He did not send me his brochure. Zebra Systems is out of the QL market and sold their existing stock at below cost to another vendor. We did not list the A+ Computer prices for some of the products that they carry. Since you already had their borchures and their was a very low price in effect for LIST members, I assumed that you have already taken advantage of the opportunity.

The prices in the tables is based on the vendor brochures supplied to me mostly before X-mas. As such some of the prices may be only X-mas specials. In other words it is a good idea to check with the vendors first. The price tabulations shown are just for reference, and they were prepared by rounding up the prices shown in the vendor brochures. Don't forget that these prices are not the last word. By this I mean, suppose that you were planning to buy three or four items for your computer, you can call any of the listed vendors, and probably work out a special deal. If you are in the market for purchasing disk drives for your computer , I suggest that you exercise caution. The prices advertised by QL vendors may not be the lowest. To give you an example the Amdek 3", cased dual drives with power supply is advertised by some TIMEX vendors for a price of close to $250.00 . The same exact product is available for $75.00 from

Peripherals Direct Ltd.
P.O. Box 4301
Northbrook, Ill. 60065
312-498-9244

If you are concerned about the availability of the 3" diskettes, there is no reason to worry. Any of your local SEARS stores can supply the diskettes.

Finally, the tabulation under books for the QL, I have listed the titles and prices from Quantum Computing. All the other vendors carry some of these titles, and some times at lower prices, than Quantum Computing. I visited Quantum Computing and spent a few hours with Frank Toumey, the owner. He is knowledgable, TS entusiast, and a professional programmer. I was surprised to find a powered up TS1500 in his basement, as well as a TS2068. Any how, I discovered that even though his brochures advertise all these titles for the QL, he actually had only six or seven titles in stock. The moral is, before ordering, make sure that the vendor has the item you need in stock. If the item is not in stock, it will probably take a couple of months for the vendor to get it from England. Don't forget, that you can also order any of the QL stuff directly from England, using plastic, probably faster and even save some money in the process. I do like to apologize in advance if there are any transcription errors in the tables.

QL Publications

A) Quantum Levels

Quantum Levels is the only QL specific U.S. Based publication. Member Tom Bent is the editor. I had a chance to talk with him on the phone a few times. He was very pleaant, knowledgable, and helpful. He sent me the first two issues of Quantum Levels as samples. The bi-monthly publication caters to the need of both beginners as well as advanced users. Since up to now three issues are out, I would urge you to subscribe from vol. 1, no. 1 (Aug. 1986) issue. Subscription is $18.95 a year. The address is

Quantum Levels
P.O. Box 64
Jefferson, N.H. 03583

B) QL World

QL World is the only British magazine specifically dedicted to the QL. It seems not to be plagued (yet!) with all the juvenile nonsense that other Sinclair related British magazines. The articles are generally informative and do cater to the needs of beginners, advanced programmers, as well as hardware types. The yearly subscription can be arranged in the $30 to $40 range by any of the dealers. I am mentioning this, because if you deal directly with QL World you might be short say around $60. (By the way why I do I get the distinct feeling that most of the British suppliers think of North Americans as suckurs? Why do they always have much higher rates for North Ameria?!?)

Monitors

A) Best Buy

The Best Buy in monitors (if you can find it in your local area) is the TAXAN B210 RGB (analog) monitor. It is priced from $160 to $180. In my area the Child World in Selden had it. I have also seen it some places in NYC. The overscanning problem on this monitor is not serious. The colors are very nice. I have used the unit with my TS2068 for two years, and I am very happy with it. Note that the Monitor which was sold by Sinclair was also manufactured by TAXAN. Don't forget that this is an analog RGB monitor. To make it compatible with the TTL RGB from your computer, all you need is three 390 Ohms resistors (1/8 watts will do), which you will insert in series with the R, G, and B lines coming out of your computer. I installed these resistors inside the DIN connector. If you don't insatll the resistors you will be over driving the monitor which may not be good for its long term health.

B) Commodore 1902

The 1902 except for the front bezel which is different, is exactly the same monitor as the Magnavox unit so highly touted by some QL vendors. It does have some extra features like comb filter, and extra inputs. The list price is $20 higher than the Magnavox. Before you buy it though, take your computer to any of the dealers. Make sure that you are happy with the display. Since this monitor is widely available I am sure you will be able to get some good prices on it.

C) High priced monitors

I had a chance to test the QL with some expensive monitors such as the NEC Multisynch, Princeton Graphics HX12, and the Commodore Monitor accompanying the Amiga Computer. It is hard to convey the high quality, very distinct image on these wide bandwidth monitors. The NEC Multisynch did not even require any adjustments. There was just no over scanning.

Services

A) Repairs

In warranty repairs are provided by A+ Computers. Out of warranty repairs are also provided. You better call them up and talk with their Technical Person. He is vailable for consultation weekdays from 3:00 to5:00 p.m.(EST).The expperience of LIST members show that the people at A+ are very courteous. I don't see users having any problem dealing with them. Your other source of repairs is sending your computer to England. You can find the ad

B)BASIC Program Transfers

If you need to transfer your long BASIC programs from your TS2068/ Spectrum to QL, and you hate to type, send a copy of the tape to our member Gene, and he will perform the service for you for a nominal fee.

Eugene Pererva
358 Railroad Ave.
Bridgeport, CT 06604

User Groups

A)QUANTA

QUANTA is the newsletter of the Independent QL Users Group (IQLUG) published ihn Brittain for the last three years. The format of the newsletter is as letters to the editor. A typical issue has more than 30 pages of some excellent material. More importantly the group has built up a gigantic public domain library (>6 MBytes), which can probably answer the needs of most any user. The Library representative in the U.S. is member Tom Bent. For membership and other info

Brian Pain
24 Oxford Street
Stony Stratford
Milton Keynes
United Kingdom MK11 1JU

Note that they accept plastic for membership (Phone 0908-564271).

B) North American User Groups

A network of the 35-40 User Groups in North America are supporting the T/S line of computers. Many of these have newsletters, which publish material provided by any of their members. For example here at LIST we would like to support the QL starting with this issue. At this point in time more than 30% of our members own a QL. As the learning curve of our members goes up we will be providing both software and hardware support. For the last few months we have noticed that ZXAppeal (Vancouver Sinclair Users Group) have published some nice stuff about QL. This is a very good newsletter, which seems to be leapfrogging from ZX81 to QL. The last few issues of RAMPTOP has also carried a column about QL. SINC_LINC, a Toronto TIMEX-Sinclair Users Club publication is another good quality newsletter which has carried material on the QL in the past. It is worth mentioning that SINC_LINC is the only newsletter which provides regular coverage on the Larken Disk Interface for the ZX81 and the TS2068/Spectrum.

ELECTRONICS PLUS

Your complete supplier for

NTE parts

THE NEW INDUSTRY STANDARD

QUALITY NTE PARTS:

- Transistors
- Thyristors
- Integrated Circuits
- Rectifiers and Diodes
- High Voltage Multipliers and Dividers
- Optoelectronic Devices
- Zeners
- Microprocessors and Support Chips
- Thermal Cut-Offs
- Bridge Rectifiers
- Unijunctions
- RF Transistors
- Microwave Oven Rectifiers
- Selenium Rectifiers
- Flameproof Resistors
- Wire Ties
- Electrolytic Capacitors
- Static Control Products
- Memory ICs

WE ALSO CARRY A COMPLETE LINE OF:

- cable: plenum-teflon, coaxial & data
- connectors
- shrink tubing
- cable markers
- soldering irons & tips
- solder & flux
- tools
- wire wrap tools
- tool cases
- bench vises
- panel meters
- lamps & LEDs
- proto boards
- equipment racks
- transformers
- capacitors & resistors
- speakers
- surge protectors
- PC boards
- telephone products
- tubes
- industrial paint
- chemicals & sprays

FIRST TIME EVERY TIME TOLL FREE CALL

800-843-9009

FAX: (301) 982-0022
(301) 441-9009

ELECTRONICS PLUS

9600 Baltimore Blvd.
College Park, MD 20740

Vendor Addresses

In the product directories presentes the last few pages, the vendors were designated by alphabetical characters. In what to follow the alphabetical designation of each vendor, as well as their addressess and phone numbers are provided.

A
QUANTUM COMPUTING
P.O. BOX 1280
DOVER, N.J. 07801
201 -328-8840

B
Sharp's Inc.
Rt. 10, Box 459
Mechanicsville, Va. 23111
804 -746-1664 (9:00 am-4:30pm)
804 -730-9697 (5:00pm-11:00pm EST)
Visa & MC accepted

C
Variety Sales
325 West Jersey St.(2-D)
Elizabeth, N.J. 07202
201 -289-5699

D
C.W. Associates
419 N. Johnson Street
Ada, Ohio 45810
419 -634-4874

E
Russell Electronics
RD 1, Box 539
Centre Hall, Pa. 16828
814 -364-1325 (1pm -6pm EDT)
plastic accepted

F
RMG Enterprises
1419 1/2 7th. Street
Oregon City , OR 97045
503 -655-7484

G
Midwest Micro-Computer Co.
7039 Magnolia Drive
Jenison , Mi. 49428
616 -669-3239 (7pm -10pm EST)

H
Knighted Computers
707 Highland Street
Fulton , N.Y. 13069
315 -593-8219 (inquiries)
1-800-325-7497(orders)
Visa & MC accepted

Hardware

	A	B	C	D	E	F	G	H
256 K Mem. Exp.			$180				$170	
512 K Mem. Exp.	call	$165	$220	$165	$230		$220	$200
"Q+4" Exp. Chasis							$374	
QL Hard Disk							Call	
Memodisk(512K+Disk & Centronics I/F)		$280						
Multifca. I/F Board	$367							
Cumana Disk I/F		$125	$155	$130				
CST Disk I/F	$125				$160			
Delta Disk I/F			$180		$180		$180	$180
" " "+128K					$290		$300	
Economy Disk I/F							$150	$150
Dual 3" Disk Drives								$250
5.25" dual DSQD Disk Drives	$277	$289						$289
5.25" dual DSDD Disk Drives	$225		$289				$289	
Dual 3.5" "			$379				$369	
QL Eprom Burner							$170	
Centronics Pr.I/F	$45	$35	$45	$36	$50		$50	$40
Qsound/Qprint		$100		$Call				
JS ROM		$50					$30	
QL ROM Cartridge							$13	
Battery Time Clock		$30						
Microd. cart/4-pack		$9	$9	$10	$11			$12
Cartridge Case	3/$1							
QL I.C.E. Mouse		$130	$120		$119		$120	
300/1200 Baud	$160							$190
Modaptor+Software	$46	$50	$50	$50	$50		$50	$45
Package of above two	$190							
300 Baud Modem					$60			$60
300 " " with adaptor + software							$100	$100
1200 Baud Smart Mod.					$160			$150
" " " " with adap. & software							$290	

Business

	A	B	C	D	E	F	G	H
TAX-I-QL(1986)		$13						
QL Entrepr.	$46	$40		$30	$35	$28	$40	$41
QL Project Plan.	$46	$40	$33	$30	$35	$28	$40	$41
QL Decision Mak.	$46			$30	$35		$40	$41
LQ Recon	$25							
QSpell	$27	$32	$33	$27	$33			$30
QL Appt. Diary	$30			$23	$25		$40	
Front Page		$30		$Call			$35	
Quill v 2.3		$10						
Abacus v 2.3		$10						
Easel v 2.3		$10						
Archive v 2.3		$10						
Q-Calculator		$16					$16	
Archiver		$26			$30		$30	
Integ. Bus. Accnts.			$150				$140	
Mail Merge		$23	$25	$22				
Sign Designer				$27				$30
Mailing List					$25		$25	
Stock Control								$30
Tasprint QL								$30
Organiser								$30

Home and Self-improvement

	A	B	C	D	E	F	G	H
Qmonix Keyboard Drill Sargent	$25							
Touch 'N' Go Typing Tutor	$33				$25		$30	$25
Morse Code Tutor				$15	$17			
QL Gardener				$20	$25		$40	$25
COSMOS (id. stars)			$23	$21	$25		$22	$25
QL Home Finance	$35				$25		$30	$25
QL Kitchen Aid	$30							

Languages / Compilers/ Assemblers & OS

	A	B	C	D	E	F	G	H
68K/OS								$150
QL-Assembler			$33			$30	$46	
Metacomco's Assem.		$46		$40	$46		$150	$50
" Lattice C	$95	$100		$110			$120	$130
CST C							$90	
Metacomco's LISP	$67	$70		$70	$80			$80
" Pascal	Call	$80		$85	$86		$90	$100
" BCPL	$67	$70		$70	$80	$76	$80	
Forth-83							$45	
Super Forth	$42							$45
Prospero Pascal	$100							
Prospero Fortran F-77	$100	$						
APL		$100		$110			$150	
Supercharge(Basic)	$67	$70		$70	$90		$90	$80
Turbo (Basic)	Call	$90						
Q-Liberator(Basic)		$80						

NEXT MONTH. . . MORE QL RESOURCES!

Club Information

The Capitol Area Timex/Sinclair User's Group (CATS) is a non-profit special interest organization dedicated to serving the interests on those who own, use or are interested in learning more about the Timex/Sinclair family of personal computers.

The official contact person for CATS is TOM BENT:
(301) 730-7187

Monthly meetings are held from 12:00 to 5:00, at the second Saturday of each month in the large meeting room of the New Carrollton Branch Public Library.

Network Information

Timex SIG on Compuserve: Wednesday night, 10:00 PM Eastern time
(Go Club)
QZX BBS: (505) 522-7081 FIDO net 15, node 6
-- " -- East coast: (703) 547-4815 FIDO net 18, node 9

CATS Newsletter
P.O. Box 725
Bladensburg MD 20710

COME TO OUR MEETING!
The next meeting of C.A.T.S. will be held on:
Saturday, April 11 1987 12:00 PM Hardware Meeting
2:00 PM General Meeting

At: New Carrollton Public Library
7414 Riverdale Road (Hwy 410), New Carrollton, MD

IF YOU ARE NOT A MEMBER OF CATS, THIS IS THE ONLY ISSUE YOU WILL RECIEVE

Dues = $16.00 per year, per family.

First Class